USER GUIDE

PH-700A Victor

ANR Aviation Headset
with Bluetooth

RAYTALK
ALWAYS RELIABLE...

What's in the Box

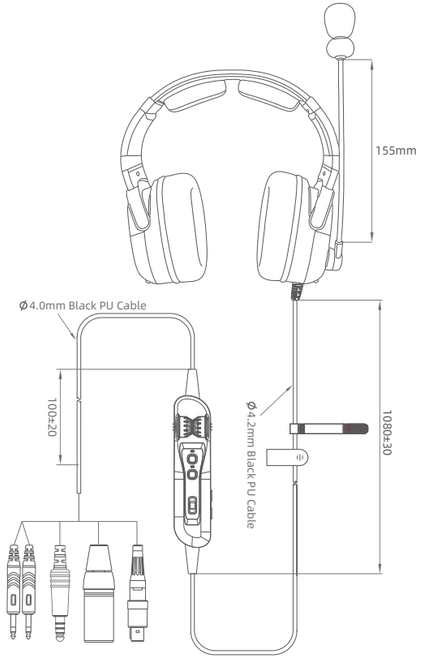

PH-700A Victor ANR Headset

User manual

Community Invitation Card

Welcome & Quick Start Guide

Carrying case

***Note:**

2 AA batteries
(not included)

NOTE: Lemo plug is not compatible with aircraft power. Use battery power only.

Specifications

TYPE	INTERCOM		NOISE REDUCTION	
	SPEAKER	MICROPHONE	SPEAKER	MICROPHONE
Size	39.8*9mm	9.85*5.5*2.6mm	39.8*9mm	6*2.2mm
Type	Dynamic	MEMS microphone	Dynamic	Capacitors
Impedance	32Ω±10%	2.2KΩ	32Ω±10%	2.2KΩ
Sensitivity	110±3dB	-54±3dB	110±3dB	-39±3dB
Directivity	/	Bi-Directional	/	Omni-Directional

Operation Instructions

Locate the left (L) and right (R) icons inside the earcups to orient the headset properly.

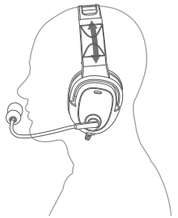

Place the headset on your head. Adjust the headband so the ear cushions completely cover your ears.

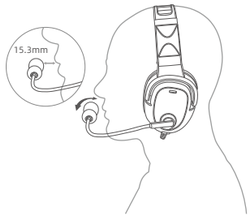

Grasp the microphone base and adjust the boom so the microphone is positioned 0.6" (15.3 mm) from your lips.

Place the headset in the carry case and position the mic over the headband to prevent boom chafing.

Microphone Placement

Step 1

Locate the release button on the bottom of the earcup with the microphone attached.

Step 2

Press and hold the release button while pulling the microphone upward to remove it.

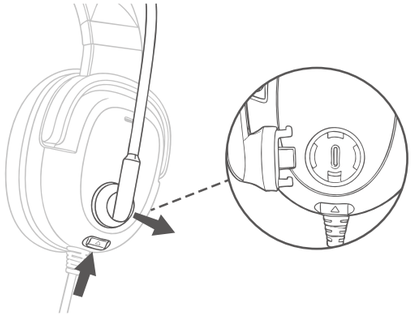

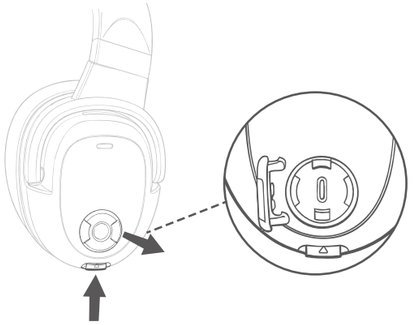

Step 3

Press and hold the release button on the other earcup, then remove the microphone port cover.

Step 4

Align the microphone with the port and insert it until it clicks securely into place.

***NOTE:**

Keep the alignment tab on the microphone or port cover facing upward when inserting it into the earcup port.

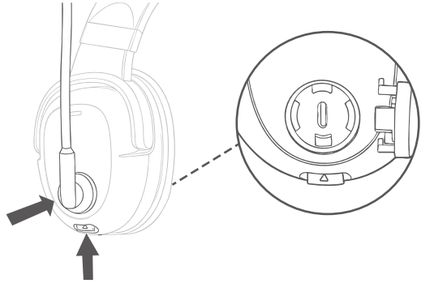

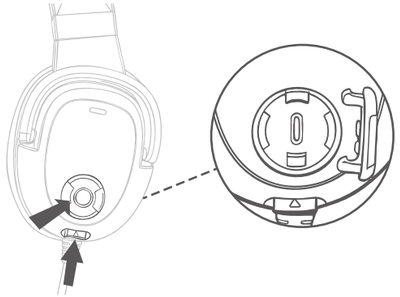

Step 5

Press and hold the release button without the microphone. Install the microphone port cover onto the earcup port (the side where the microphone was removed), and press it until it is securely fixed.

***NOTE:**

Do NOT force the microphone port cover into the socket.
If the microphone port cover is not securely installed, there will be no audio in the earcup.

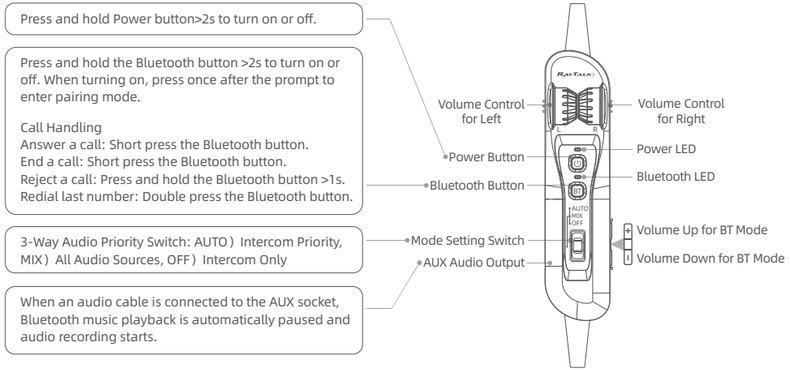

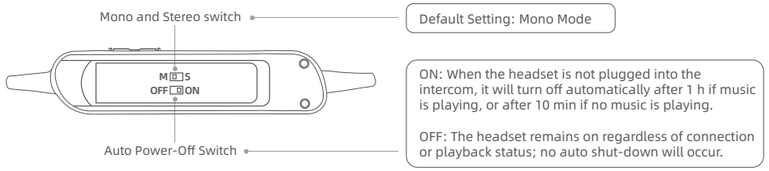

Status Lights

Power Indicator Light

Status	Light Activity
High Battery	Blue LED slowly flashes every 4 seconds
Medium Battery	Purple LED slowly flashes every 4 seconds
Low Battery	Red LED slowly flashes every 4 seconds
Power on	Blue LED remains solid for 1 second
Power off	Red LED remains solid for 1 second, then turns off

Bluetooth Indicator Light

Status	Light Activity
Pairing mode	Red and blue alternating flashing
Bluetooth connected	Blue flashes rapidly three times every 2 seconds
Music playback active	Blue flashes twice every second during music playback
Incoming call	Blue LED flashes steadily
In-call	Blue illuminates briefly every 2 seconds
Bluetooth disconnected	Red flashes rapidly twice every 2 seconds

Safety Information

- Do not pull the cable when unplugging; always hold the plug to avoid damage.
- Remove the batteries from the headset for long-term storage.
- Please don't attempt to modify or repair the headset without proper training and tools.
- Prohibited from prolonged immersion in water.
- Keep the headset away from fire or extreme heat.
- Dispose of electronic products according to local regulations.

Warranty Service

1. For headphones purchased from RayTalk, you are entitled to after-sales repair services provided by our company or authorized suppliers in case of product quality issues.
2. We offer a one-year limited warranty for our products, starting from the date of receipt of the goods.
3. During the warranty period, we will repair or replace products for various defects caused by raw materials or manufacturing processes, depending on the specific circumstances.

The above warranty does not include the following:

1. Products beyond the warranty period.
2. Unauthorized dismantling and repair.
3. Failed to adhere to the product instructions, resulting in damage.
4. Damage caused by force majeure events, such as immersion, moisture, mold, and natural disasters, will not be covered under our warranty.
5. Natural aging and regular use may cause consumables to wear and tear, which are not covered under the warranty.

• PH-700A Victor User Guide and more available at www.raytalkcomms.com/resource

RayTalk Communications Ltd
86 0755 83017294
sales@raytalkcomms.com
www.raytalkcomms.com
3rd Floor, Building C, Kemron Science & Technology Park, Guansheng 5th Road, Guanlan,Longhua District,Shenzhen,China,518110

12 MONTHS WARRANTY RoHS FC CE